Origami neko

by Studio Vondom

A collection of design pieces by Studio Vondom where the millenary tradition of the Japanese art of paper folding merges with the avant-garde of contemporary design.



VONDOM

Info

Description

Weight: 20 Kg

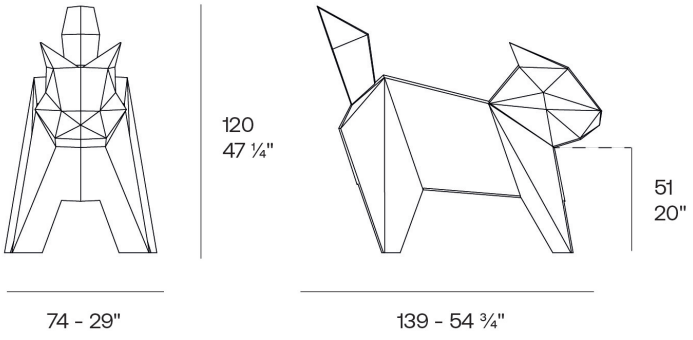

Origami. Neko
Origami. Neko
44221

VONDOM

Finishes

finishes

Basic
Ref. 44221

white 2001


black 2002


ecru 2003


tortora 2004


gray 2005


anthracite 2006


brown 2008


garnet 2015


green 2016

cream 2017


blue 2018


camel 2020


clay 2022


ecru granite


cream granite

ice 2101

Matt Polyethylene

Lacquered
Ref. 44221F

white 3101


black 3102

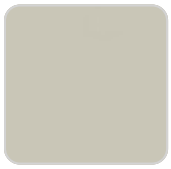
ecru 3103

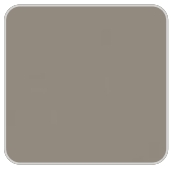
tortora 3104


gray 3105


anthracite 3106


garnet 3113

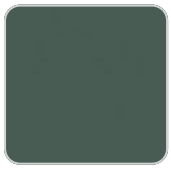
green 3116

cream 3117


blue 3118


brown 3125

Lacquered Polyethylene

lighting

Led – White
Ref. 44221W

ice 2101

White internally lit unit with LED technology. Available only in matte ice white finish.

LED RGBW – Cable
Ref. 44221L

ice 2101

Unit with internal lighting with RGBW LED technology and remote control unit for switching colors. Available only in matte ice white finish. Remote control included.

LED RGBW DMX – Cable
Ref. 44221D

ice 2101

Unit with internal lighting with RGBW LED technology and remote control unit for switching colors. Also controlLED by DMX-1024 (wireless), enabling communication between one or more products simultaneously via the DMX transmitter (not included). There are two options to choose from: Professional XLR DMX and Home WIFI DMX. (Remote control included).
Optional battery

LED RGBW – Battery
Ref. 44221Y

ice 2101

Unit with internal lighting with battery-powered RGBW LED technology. Includes charger and remote control for switching colors and charger. Available only in matte ice white finish.
LED RGBW DMX – Battery

Ref. 44221DY

ice 2101

Unit with internal lighting with RGBW LED technology and remote control unit for switching colors. Also controlLED by DMX-1024 (wireless), enabling communication between one or more products simultaneously via the DMX transmitter (not included). There are two options to choose from: Professional XLR DMX and Home WIFI DMX. (Remote control included).

Ambients

