VONDOM

Products / Planters / Vases Nano Planter ø14×12

Vases nano planter ø14×12

by JM Ferrero

VASES Collection, is made up of flowerpots, furniture and lighting designed by the Valencian designer JM Ferrero. It's shapes were inspired by diamond cutting, producing pieces of clear-cut shapes and great style, creating a big visual impact.



VONDOM

Info

Description

Pot made of polyethylene resin by rotational moulding. 100% Recyclable. Item suitable for indoor and outdoor use. Available in different finishes.

Weight: 0.2 Kg

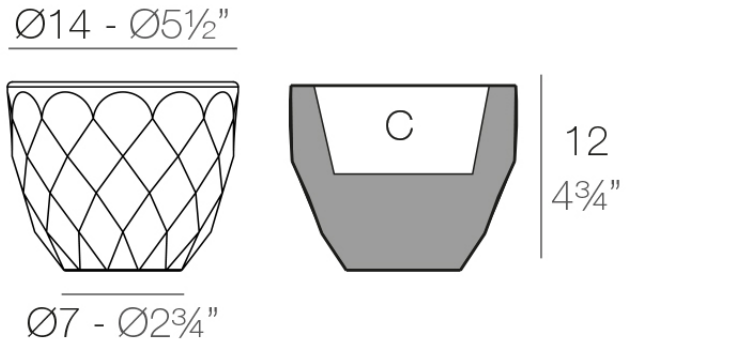

VASES Nano Ø14 x 12 cm C = 0,5 L
VASES Nano Ø5½” x 4¾” C = ¼ gal

VONDOM

Finishes

finishes

Basic
Ref. 47012A

white 2001


black 2002


ecru 2003


tortora 2004


gray 2005


anthracite 2006


brown 2008


garnet 2015


green 2016

cream 2017


blue 2018


camel 2020


clay 2022


ecru granite


cream granite

ice 2101

Matt Polyethylene

Lacquered
Ref. 47012F


white 3101
black 3102
ecru 3103
tortora 3104
gray 3105
anthracite 3106
garnet 3113
green 3116
cream 3117
blue 3118
brown 3125

Lacquered Polyethylene

lighting

Led – White
Ref. 47012W

ice 2101

White internally lit unit with LED technology. Available only in matte ice white finish.

VONDOM

Ambients

