Suave puff 85×40

by Marcel Wanders

The Suave in&out furniture collection, designed by Marcel Wanders for Vondom, blurs the boundaries between indoors and outdoors, achieving a superior level of softness, comfort and relaxation. With innovative design and high quality materials, Suave transforms any space into a cosy and elegant oasis.



VONDOM

Info

Description

Furniture made of flexible polyurethane injected cold. This material possesses a high resilience and durability.

The flexible polyurethane foam has an open cellular structure, it is a very elastic material. It hinders the growth of fungi and bacteria.

Weight: 24.67 Kg

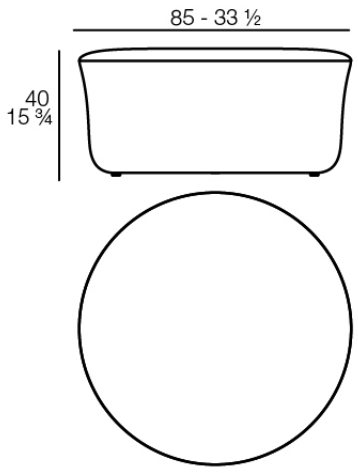

SUAVE Puff 85x40
SUAVE Puff 85x40

Combinations

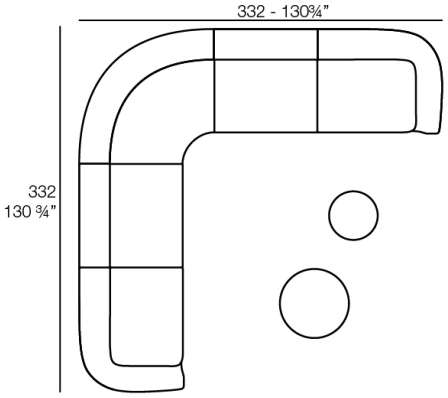

2 x 67002 Módulo Central - Sectional Sofa Central
1 x 67001 Módulo Brazo Izquierdo - Sectional Sofa Arm Left
1 x 67003 Módulo Brazo Derecho - Sectional Sofa Arm Right
1 x 67015 Módulo Esquina - Sectional Sofa Corner
1 x 67006 Puff Redondo 45 - Circular Puff 45
1 x 67007 Puff Redondo 65 - Circular Puff 65

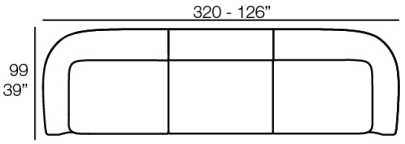

1 x 67002 Módulo Central - Sectional Sofa Central
1 x 67001 Módulo Brazo Izquierdo - Sectional Sofa Arm Left
1 x 67003 Módulo Brazo Derecho - Sectional Sofa Arm Right

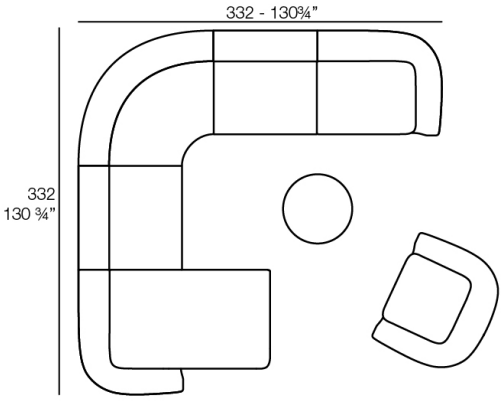

2 x 67002 Módulo Central - Sectional Sofa Central
1 x 67001 Módulo Brazo Izquierdo - Sectional Sofa Arm Left
1 x 67016 Módulo Chaiselonge Derecho - Sectional Sofa Chaiselonge Right
1 x 67015 Módulo Esquina - Sectional Sofa Corner
1 x 67014 Butaca - Armchair
1 x 67007 Puff Redondo 65 - Circular Puff 65

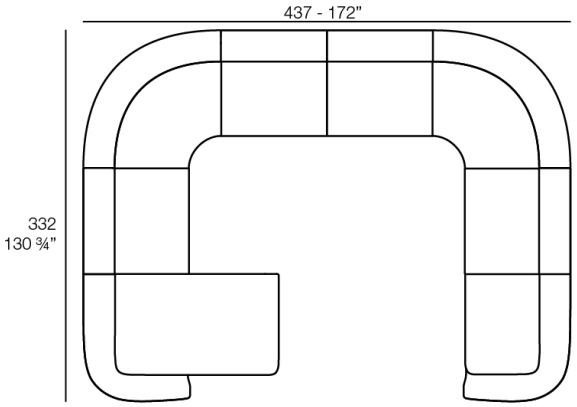

4 x 67002 Módulo Central - Sectional Sofa Central
1 x 67001 Módulo Brazo Izquierdo - Sectional Sofa Arm Left
2 x 67015 Módulo Esquina - Sectional Sofa Corner
1 x 67016 Módulo Chaiselonge Derecho - Sectional Sofa Chaiselonge Right

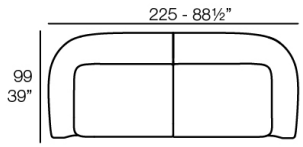

1 x 67001 Módulo Brazo Izquierdo - Sectional Sofa Arm Left
1 x 67003 Módulo Brazo Derecho - Sectional Sofa Arm Right

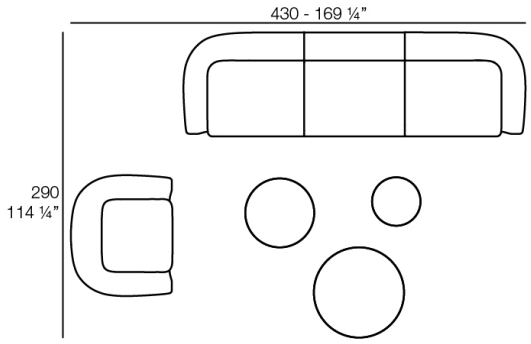

1 x 67002 Módulo Central - Sectional Sofa Central
1 x 67001 Módulo Brazo Izquierdo - Sectional Sofa Arm Left
1 x 67003 Módulo Brazo Derecho - Sectional Sofa Arm Right
1 x 67014 Butaca - Armchair
1 x 67006 Puff Redondo 45 - Circular Puff 45
1 x 67007 Puff Redondo 65 - Circular Puff 65
1 x 67008 Puff Redondo 85 - Circular Puff 85

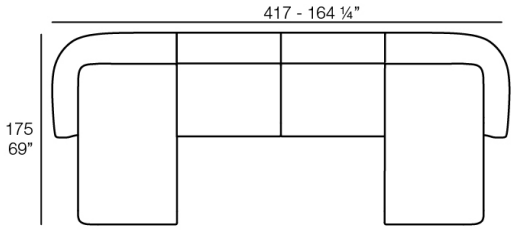

2 x 67002 Módulo Central - Sectional Sofa Central
1 x 67018 Módulo Chaiselonge Izquierdo - Sectional Sofa Chaiselonge Left
1 x 67016 Módulo Chaiselonge Derecho - Sectional Sofa Chaiselonge Right

Finishes

finishes

Polyurethane
Ref. 67008

Furniture made of flexible polyurethane injected cold. This material possesses a high resilience and durability.

fabric

GETARIA
Ref. 67008T


blue 10024 getaria


iceberg 10037 getaria


ocean 10023 getaria


gallant 10025 getaria


brown 10050 getaria


tortora 10048 getaria


niord 10015 getaria


cream 10047 getaria


granite 10008 getaria


garnet 10046 getaria


oasis 10007 getaria


gray 10042 getaria


oversea 10002 getaria

Group 2. Premium high density 100% acrylic fabric, available in a wide range of colors.

VONDOM

ZUMAIA
Ref. 67008T


garnet 10202 zumaia


white 10200 zumaia


cream 10201 zumaia


black 10205 zumaia


green 10204 zumaia


blue 10203 zumaia

Group 2. Elegant 100% acrylic fabric, with a soft terry, pleasant to the touch and a unique color combination.

SUANCES
Ref. 67008T


ocean 10311 suances


gray 10313 suances


cream 10303 suances


mustard 10305 suances


green 10310 suances


blue 10312 suances


tortora 10302 suances


camel 10304 suances


jade 10309 suances


white 10300 suances


olive 10317 suances


brown 10308 suances


peach 10316 suances


black 10315 suances


garnet 10307 suances





anthracite 10314 suances

clay 10306 suances

Group 2. Bocle fabric, which stands out for its warmth and softness, with matching colors that add depth and elegance.

RIBADEO
Ref. 67008T


gray 10333 ribadeo


ecru 10321 ribadeo


cream 10323 ribadeo


ocean 10331 ribadeo


tortora 10322 ribadeo


green 10330 ribadeo


blue 10332 ribadeo


white 10320 ribadeo


mint 10337 ribadeo


brown 10328 ribadeo


olive 10336 ribadeo


clay 10326 ribadeo


peach 10335 ribadeo


mustard 10325 ribadeo


camel 10324 ribadeo


anthracite 10334 ribadeo

Group 2. Soft fabric with marbled yarns of different thicknesses that create a rich and visually intreresting texture.Its Linen look adds a touch of natural style.

LOURO
Ref. 67008T


blue 10352 louro


anthracite 10354 louro


cream 10343 louro


clay 10346 louro


ocean 10351 louro


gray 10353 louro


tortora 10342 louro


camel 10344 louro


green 10350 louro


jade 10349 louro


olive 10356 louro


brown 10348 louro


peach 10355 louro


garnet 10347 louro

Group 2. Soft and versatile fabric, which presents a neutral base color that makes it easy to combine with different colors and fabrics.

Ambients







