Serra puff

by Jean-Marie Massaud

VONDOM

Info

Description

Weight: 15 Kg

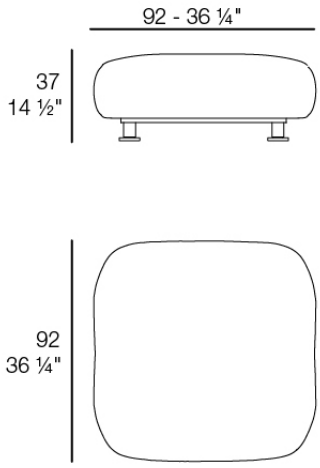

Serra Puff
Serra Sectional Sofa Puff
Ref. 70204

VONDOM

Finishes

finishes

Aluminium
Ref. 70204



ecru

Lacquered aluminium profile.

Ambients











