# Serra corner section

by Jean-Marie Massaud

VONDOM

# Info

## Description

Weight: 25 Kg

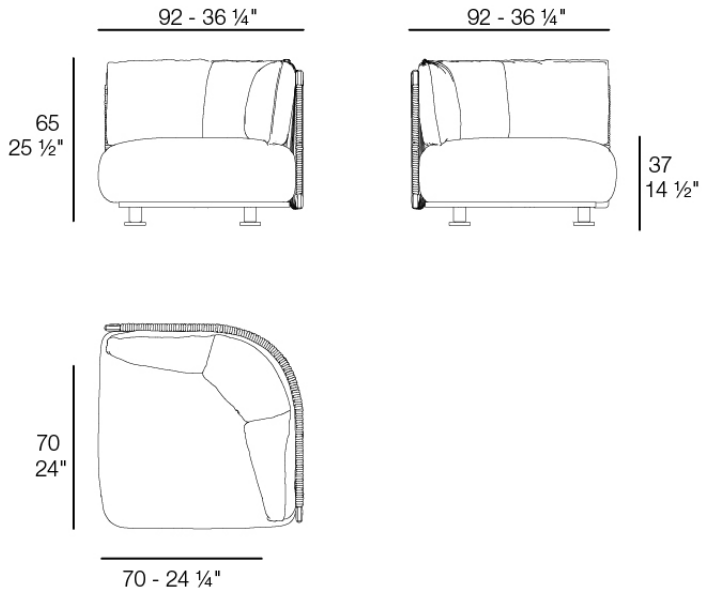


Serra Esquina
Serra Sectional Sofa Corner
Ref. 70205

VONDOM

# Finishes

## finishes

Aluminium
Ref. 70205



ecru

Lacquered aluminium profile.

# Ambients











