Faz table stainless base 70x70x72

by Ramón Esteve

Vondom's Faz collection, designed by Ramón Esteve, is one of the firm's most iconic collections. It stands out for its modular design and sophistication, representing harmony, serenity and timelessness through mineral and emphatic shapes. Faz transforms environments with its unique combination of material and light, creating an enveloping and exclusive atmosphere.

VONDOM

Info

Description

Made of polyethylene resin by rotational moulding.100% Recyclable. Item suitable for indoor and outdoor use. Available in different finishes.

Weight: 9.5 Kg

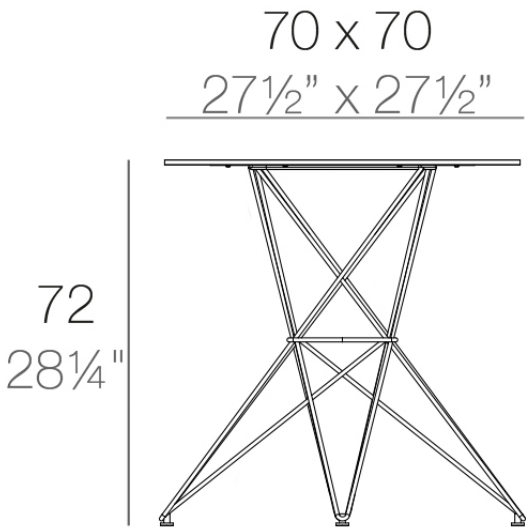

FAZ Mesa Inox 70x70
FAZ Dinning Table Stainless
Base 27½"x 27½"

VONDOM

Finishes

tabletops

HPL Black Edge Top
Ref. 54058C

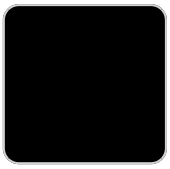
white

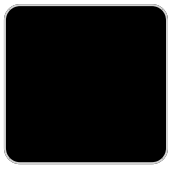
black

HPL black edge

HPL Solid Core Top
Ref. 54058CB

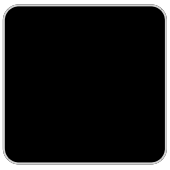
white

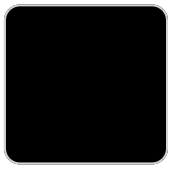
black

HPL solid core

tabletops

HPL Black Edge Top
Ref. VVAR00522

white(black edge)

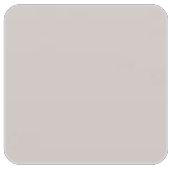

ecru(black edge)

black(black edge)

Ambients