Gatsby base ø35x65cm s50

by Ramón Esteve

The Gatsby collection, elegantly designed by Ramón Esteve for Vondom, embodies the essence of Art Deco-inspired outdoor living. Influenced by the lavish parties and opulent lifestyle of the Roaring Twenties, this collection embodies a blend of modernity and timeless sophistication.
“Something new, extraordinary, beautiful, simple but sophisticatedly designed” said Francis Scott Fitzgerald of his goals for the novel he was about to write, The Great Gatsby was born in a time of prosperity, parties and excess. It was called “The American Dream”.



VONDOM

Info

Description

Weight: 3.75 Kg

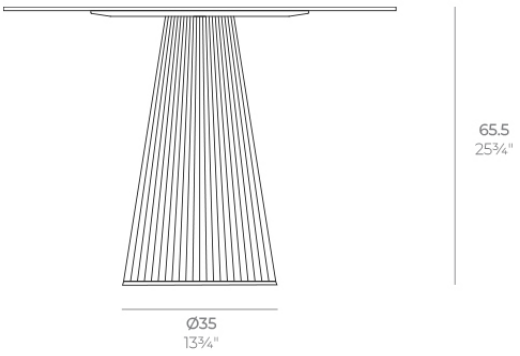

GATSBY Mesa Base Redonda Ø35x65.5cm S50
GATSBY Round Base Table Ø35x73.5cm S50
ref. 54480

TABLE TOP - SOBRE

Ø79 cm
Ø31"

Ø89 cm
Ø35"

Ø100 cm
Ø39¼"

VONDOM

Finishes

finishes

Basic
Ref. 54480

white 2001


black 2002


ecru 2003


tortora 2004


gray 2005


anthracite 2006


brown 2008


garnet 2015


green 2016

cream 2017


blue 2018


camel 2020


clay 2022


ecru granite


cream granite

ice 2101

Matt Polyethylene

tabletops

HPL Black Edge Top
Ref. 66129


white(black edge)


ecru(black edge)


black(black edge)

HPL Solid Core Top
Ref. 66129B


white (white edge)


ecru


tortora


smoked


cream


camel


clay


garnet


brown


green


ocean


blue


gray


anthracite


white stone


cream stone


ecru stone


tortora stone

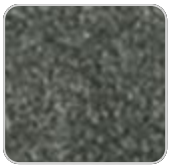
green stone


gray stone


black stone


oak1


oak2


walnut