Fiesta curved bar

by Archirivolto Design

FIESTA, a designer bar counter by **Archirivolto** for **VONDOM**: “design is beauty, harmony and freedom and cannot therefore be bound by strict, pre-established rules, nor can it only be seen as the privilege of social or cultural elite”.

Info

Description

Made of polyethylene resin by rotational moulding.100% Recyclable. Item suitable for indoor and outdoor use. Available in different finishes.

Weight: 60.2 Kg

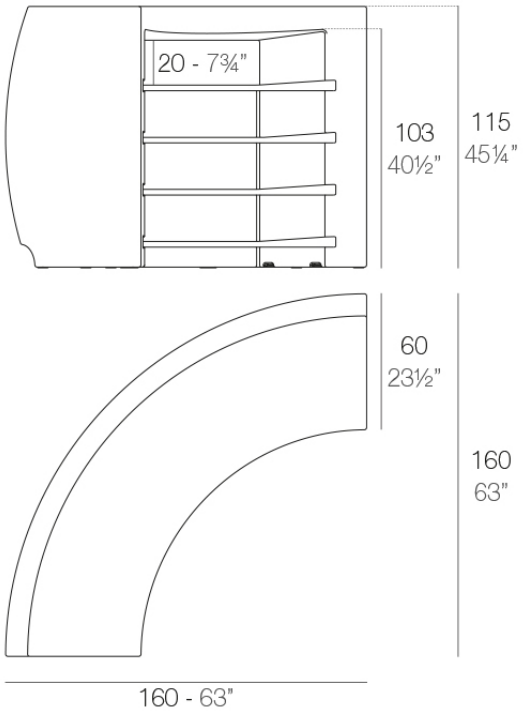

FIESTA Barra curva
FIESTA Curved counter

Combinations

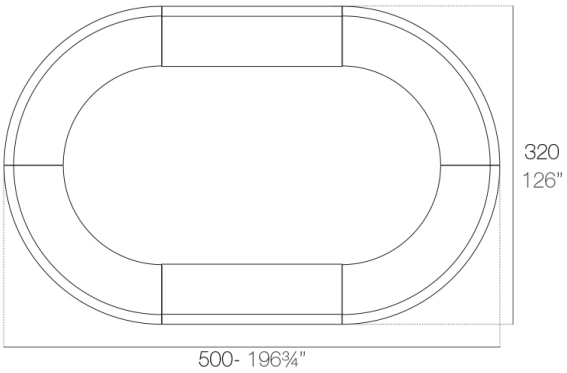

2 x 56001 180 Barra - 180 Counter
4 x 56002 Barra curva - Curved counter

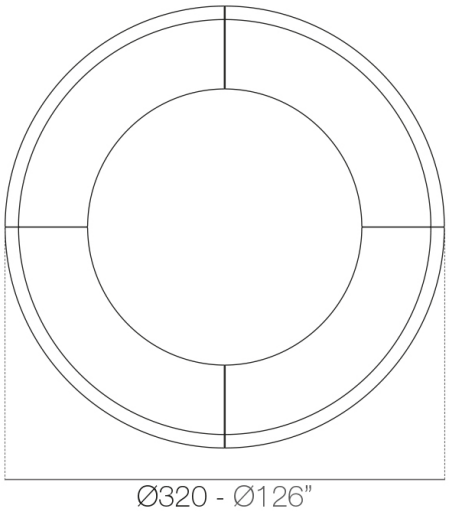

4 x 56002 Barra curva - Curved counter

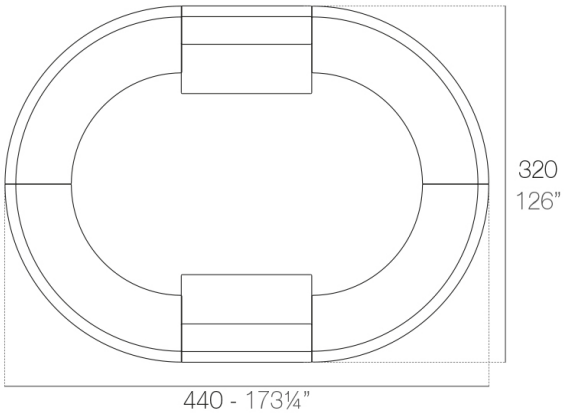

2 x 56023 120 Barra - 120 Counter
4 x 56002 Barra curva - Curved counter

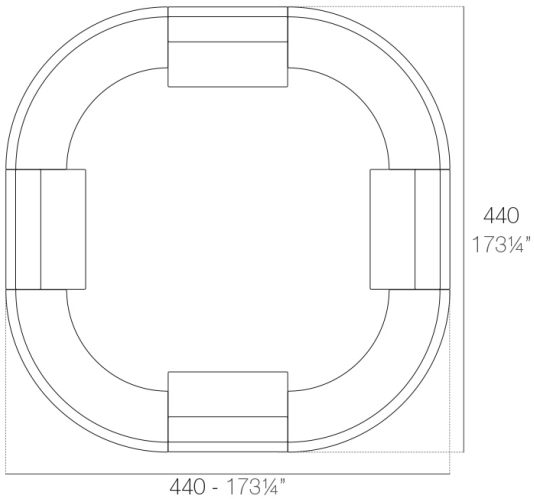

4 x 56023 120 Barra - 120 Counter
4 x 56002 Barra curva - Curved counter

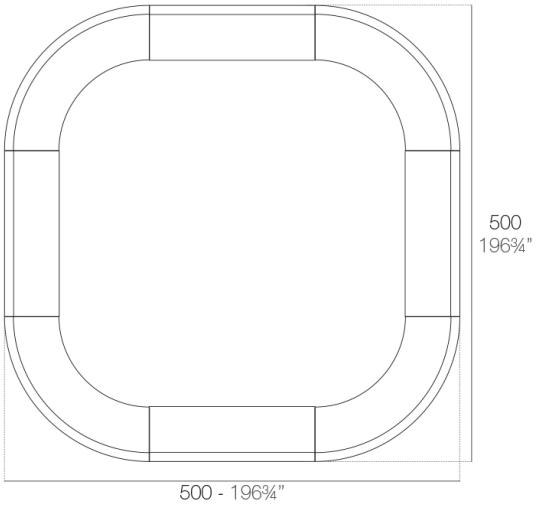

4 x 56001 180 Barra - 180 Counter
4 x 56002 Barra curva - Curved counter

Accessories

- **BLUETOOTH**

  Link your smartphone or tablet to the sound system via Bluetooth.

- **TOP**

  HPL Solid Core Top

- **SHELVES**

Finishes

finishes

Basic
Ref. 56002

Matt Polyethylene

Lacquered
Ref. 56002F

Lacquered Polyethylene

lighting

Led White
Ref. 56002W

White internally lit unit with LED technology. Available only in matte ice white finish.

Led RGBW
Ref. 56002L

ice 2101

Unit with internal lighting with RGBW LED technology and remote control unit for switching colors. Available only in matte ice white finish. Remote control included.

Led RGBW DMX
Ref. 56002D

ice 2101

Unit with internal lighting with RGBW LED technology and remote control unit for switching colors. Also controlLED by DMX-1024 (wireless), enabling communication between one or more products simultaneously via the DMX transmitter (not included). There are two options to choose from: Professional XLR DMX and Home WIFI DMX. (Remote control included).
Optional battery

Led RGBW Battery
Ref. 56002Y

ice 2101

Unit with internal lighting with battery-powered RGBW LED technology. Includes charger and remote control for switching colors and charger. Available only in matte ice white finish.
Led RGBW DMX Battery

Ref. 56002DY

ice 2101

Unit with internal lighting with RGBW LED technology and remote control unit for switching colors. Also controlLED by DMX-1024 (wireless), enabling communication between one or more products simultaneously via the DMX transmitter (not included). There are two options to choose from: Professional XLR DMX and Home WIFI DMX. (Remote control included).

tabletops

HPL Black Edge
Ref. 56002E

tortora stone
black stone
gray stone
white stone
smoked
ecru stone
white (white edge)
oak1
ecru
oak2
tortora
cream
garnet
brown
green
blue
anthracite
white(black edge)
ecru(black edge)
black(black edge)

VONDOM

HPL black edge

HPL Solid Core
Ref. 56002Z

tortora stone

black stone

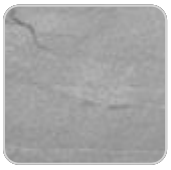
gray stone

white stone

smoked

ecru stone

white (white edge)

oak1

ecru

oak2

tortora

cream

garnet

brown

green

blue

anthracite

HPL solid core

ruedas

WHEELS
Ref. 56001B

gray 2005