Brooklyn bar stool ø45×76

by Eugeni Quitllet

Brooklyn furniture collection, designed by Eugeni Quitllet for Vondom. It's a fusion of **modern and classic styles**, creating a timeless design that spans the past, present, and future. Inspired by the iconic straight lines and curves of the Brooklyn Bridge, this urban collection is perfect for any contemporary space, making it a great fit for the world's best venues.



VONDOM

Info

Description

Made of injected polypropylene with fiber glass. Stackable. Available in several colors. Item suitable for indoor and outdoor use.

Weight: 4.3 Kg

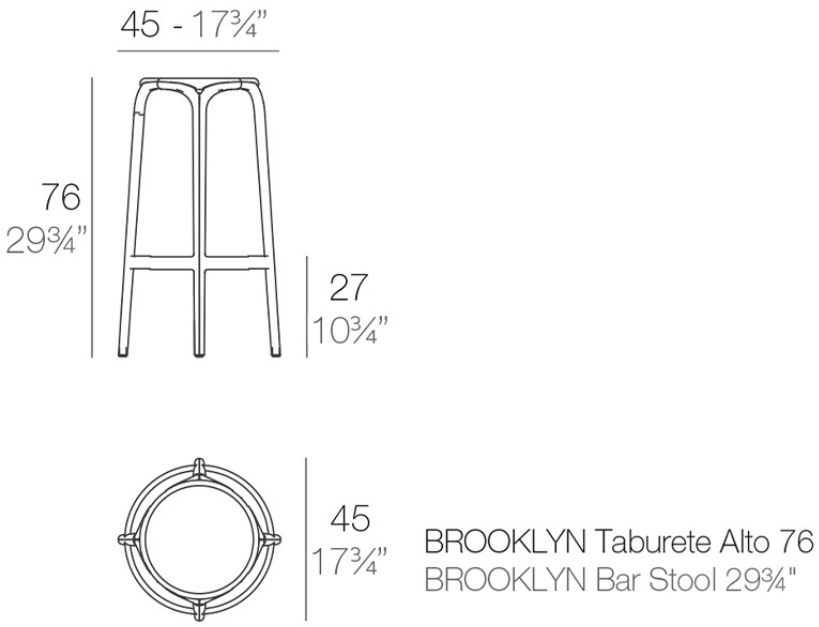

VONDOM

Finishes

finishes

Basic
Ref. 65027


white


black


ecru


tortora

Available in various colors

Ambients



