Suave sectional sofa curve

by Marcel Wanders

Meticulously designed for Vondom, Marcel Wanders' Suave collection of upholstered outdoor furniture redefines the conventional boundaries between indoor and outdoor living, seamlessly blending softness, comfort and relaxation into a harmonious symphony of luxury. With exquisite attention to detail and unparalleled finishes, each piece exudes sophistication and elegance, transforming any outdoor space into a veritable oasis of style, tranquility and indulgence, where every moment is an invitation to unwind and savor life's finer pleasures.

Info

Description

Furniture made of flexible polyurethane injected cold. This material possesses a high resilience and durability.

The flexible polyurethane foam has an open cellular structure, it is a very elastic material. It hinders the growth of fungi and bacteria.

Weight: 39.41 Kg

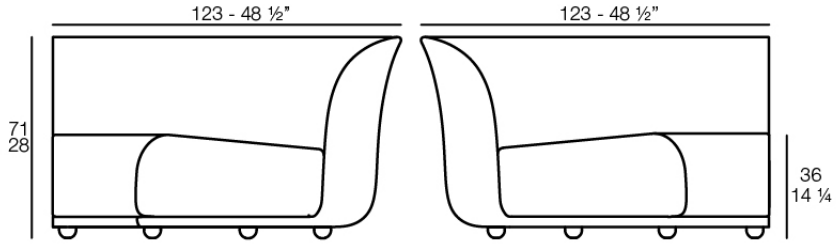

SUAVE Sofá Módulo Esquina
SUAVE Sectional Sofa Corner

Combinations

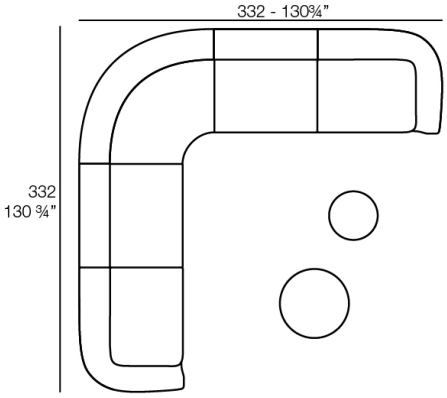

2 x 67002 Módulo Central - Sectional Sofa Central
1 x 67001 Módulo Brazo Izquierdo - Sectional Sofa Arm Left
1 x 67003 Módulo Brazo Derecho - Sectional Sofa Arm Right
1 x 67015 Módulo Esquina - Sectional Sofa Corner
1 x 67006 Puff Redondo 45 - Circular Puff 45
1 x 67007 Puff Redondo 65 - Circular Puff 65

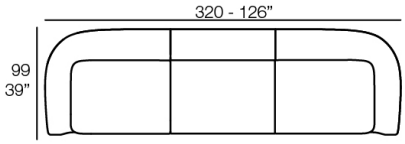

1 x 67002 Módulo Central - Sectional Sofa Central
1 x 67001 Módulo Brazo Izquierdo - Sectional Sofa Arm Left
1 x 67003 Módulo Brazo Derecho - Sectional Sofa Arm Right

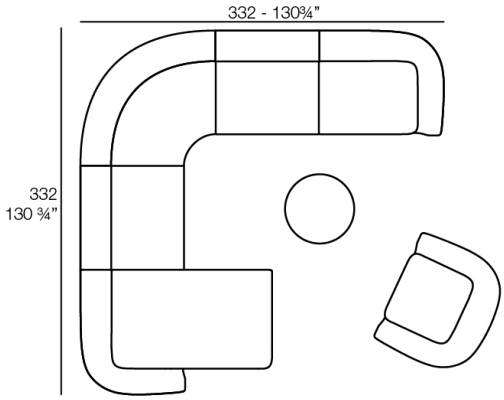

2 x 67002 Módulo Central - Sectional Sofa Central
1 x 67001 Módulo Brazo Izquierdo - Sectional Sofa Arm Left
1 x 67016 Módulo Chaiselonge Derecho - Sectional Sofa Chaiselonge Right
1 x 67015 Módulo Esquina - Sectional Sofa Corner
1 x 67014 Butaca - Armchair
1 x 67007 Puff Redondo 65 - Circular Puff 65

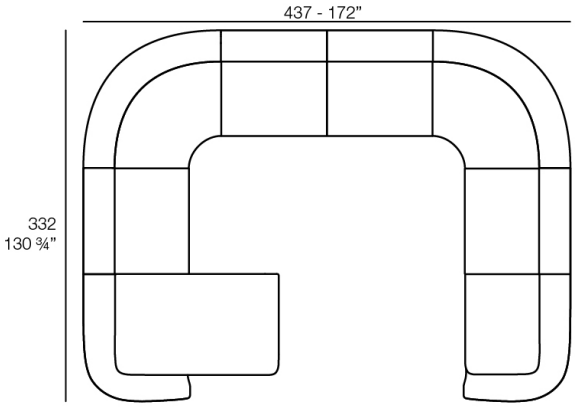

4 x 67002 Módulo Central - Sectional Sofa Central
1 x 67001 Módulo Brazo Izquierdo - Sectional Sofa Arm Left
2 x 67015 Módulo Esquina - Sectional Sofa Corner
1 x 67016 Módulo Chaiselonge Derecho - Sectional Sofa Chaiselonge Right

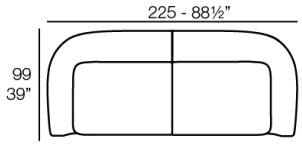

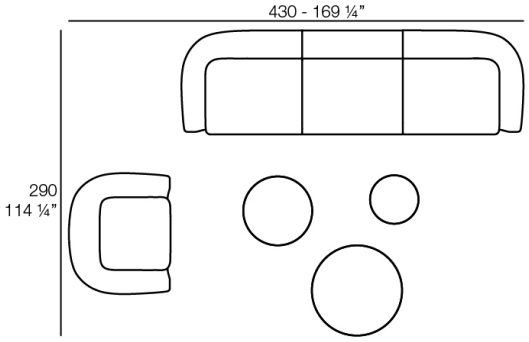

1 x 67001 Módulo Brazo Izquierdo - Sectional Sofa Arm Left
1 x 67003 Módulo Brazo Derecho - Sectional Sofa Arm Right

1 x 67002 Módulo Central - Sectional Sofa Central
1 x 67001 Módulo Brazo Izquierdo - Sectional Sofa Arm Left
1 x 67003 Módulo Brazo Derecho - Sectional Sofa Arm Right
1 x 67014 Butaca - Armchair
1 x 67006 Puff Redondo 45 - Circular Puff 45
1 x 67007 Puff Redondo 65 - Circular Puff 65
1 x 67008 Puff Redondo 85 - Circular Puff 85

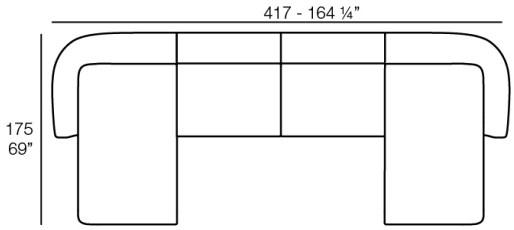

2 x 67002 Módulo Central - Sectional Sofa Central
1 x 67018 Módulo Chaiselonge Izquierdo - Sectional Sofa Chaiselonge Left
1 x 67016 Módulo Chaiselonge Derecho - Sectional Sofa Chaiselonge Right

Finishes

finishes

Polyurethane
Ref. 67015

Furniture made of flexible polyurethane injected cold. This material possesses a high resilience and durability.

fabric

GETARIA
Ref. 67015ST

granite 10008 getaria

brown 10050 getaria

terra 10039 getaria

oasis 10007 getaria

tortora 10048 getaria

camel 10033 getaria

cream 10047 getaria

gallant 10025 getaria

pearl 10006 getaria

garnet 10046 getaria

blue 10024 getaria

oversea 10002 getaria

black 10044 getaria

ocean 10023 getaria

anthracite 10043 getaria

emerald 10016 getaria

white 10041 getaria

niord 10015 getaria

dune 10009 getaria

moon 10040 getaria

Group 2. Premium high density 100% acrylic fabric, available in a wide range of colors.

ZUMAIA
Ref. 67015ST

black 10205 zumaia

green 10204 zumaia

blue 10203 zumaia

garnet 10202 zumaia

cream 10201 zumaia

white 10200 zumaia

Group 2. Elegant 100% acrylic fabric, with a soft terry, pleasant to the touch and a unique color combination.

SUANCES
Ref. 67015ST

jade 10309 suances

ecru 10301 suances

olive 10317 suances

white 10300 suances

peach 10316 suances

brown 10308 suances

black 10315 suances

garnet 10307 suances

anthracite 10314 suances

clay 10306 suances

gray 10313 suances

mustard 10305 suances

blue 10312 suances

camel 10304 suances

ocean 10311 suances

cream 10303 suances

green 10310 suances

tortora 10302 suances

Group 2. Bocle fabric, which stands out for its warmth and softness, with matching colors that add depth and elegance.

RIBADEO
Ref. 67015ST

peach 10335 ribadeo

garnet 10327 ribadeo

anthracite 10334 ribadeo

clay 10326 ribadeo

gray 10333 ribadeo

mustard 10325 ribadeo

camel 10324 ribadeo

blue 10332 ribadeo

cream 10323 ribadeo

ocean 10331 ribadeo

tortora 10322 ribadeo

green 10330 ribadeo

mint 10337 ribadeo

jade 10329 ribadeo

ecru 10321 ribadeo

olive 10336 ribadeo

brown 10328 ribadeo

white 10320 ribadeo

Group 2. Soft fabric with marbled yarns of different thicknesses that create a rich and visually intreresting texture.Its Linen look adds a touch of natural style.

LOURO
Ref. 67015ST

peach 10355 louro

garnet 10347 louro

anthracite 10354 louro

clay 10346 louro

gray 10353 louro

mustard 10345 louro

blue 10352 louro

camel 10344 louro

ocean 10351 louro

cream 10343 louro

green 10350 louro

tortora 10342 louro

jade 10349 louro

olive 10356 louro

brown 10348 louro

Group 2. Soft and versatile fabric, which presents a neutral base color that makes it easy to combine with different colors and fabrics.