Milos coffee table

by Jean-Marie Massaud

The Milos collection marks **Vondom's first collaboration with esteemed French designer Jean-Marie Massaud** and exemplifies the harmonious fusion of simplicity and functionality in exquisite garden furniture.
The exceptional design of the Milos collection was recently honored with the **Reddot Design Award 2024**, solidifying its well-deserved reputation as a pioneer of innovation and style in contemporary outdoor furniture, setting new standards for aesthetic excellence.



VONDOM

Info

Description

The coffee tables represent the essence of the Mediterranean lounge style of the Milos collection. These tables are manufactured, featuring a cement surface available in different finishes.

They stand out for their iroko wood legs, which not only add a touch of warmth and sophistication, but also ensure the stability and connection with nature that is characteristic of Milos.

Weight: 30.4 Kg

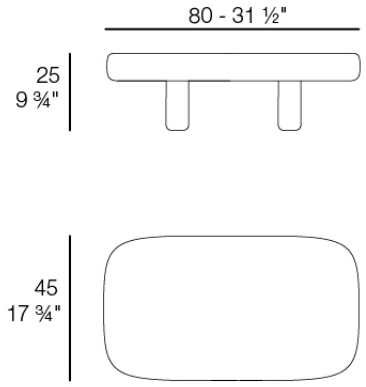

MILOS Mesa Centro 80 x 45
MILOS Low Table 31 ½ x 17 ¾"
Ref. 70018

Finishes

finishes

Cement
Ref. 70018


tortora


cream

Furniture elements manufactured in high-strength fibrated mortar, by casting and vibrating in elastorner moulds and rigid fiberglass shell

Ambients



