Pasadena table 120x80x28

by Jean-Marie Massaud

‘The ambition of Pasadena is to reinterpret an archetype, to make an architectural product with this language and proportions, but generous in terms of comfort’. The collaboration between Jean-Marie Massaud and Vondom beats strongly in Pasadena, a proposal that combines serenity and warmth. The result is evident at first glance: soft profiles, balanced proportions and a comfort that invites relaxation from the very beginning.



VONDOM

Info

Description

Weight: 36 Kg

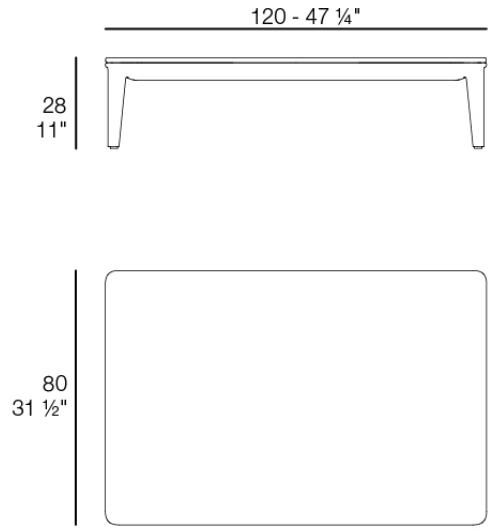

PASADENA Mesa Centro 120x80
PASADENA Low Table 47 ¼" x 31 ½"
Ref. 70065

Combinations

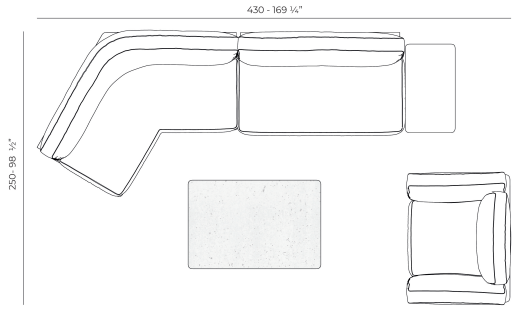

1 x 70071 Sofá Módulo Esquina 60º- Sectional Sofa Corner 60º
1 x 70055 Sofá Módulo Central- Sectional Sofa Central
1 x 70050 Butaca - Armchair
1 x 70065 Mesa Centro 120 x 80 - Low Table 47 ¼ x 31 ½"

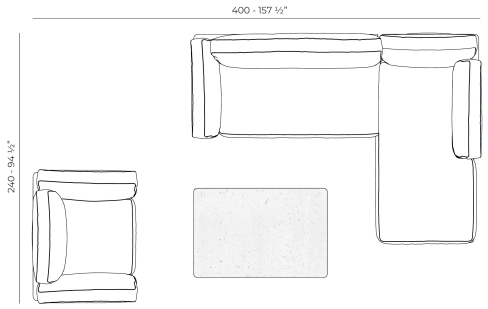

1 x 70050 Butaca - Armchair
1 x 70053 Sofá Módulo Brazo Derecho XL - Sectional Sofa Right XL
1 x 70059 Sofá Módulo Chaiselonge Izquierda - Sectional Sofa Chaiselonge Left
1 x 70065 Mesa Centro 120 x 80 - Low Table 47 ¼ x 31 ½"

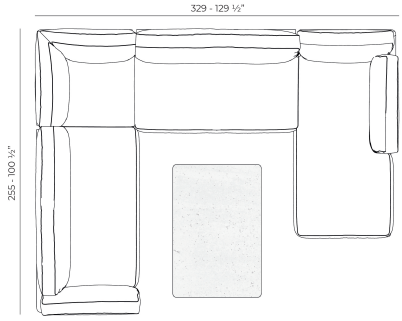

1 x 70055 Sofá Módulo Central- Sectional Sofa Central
1 x 70053 Sofá Módulo Brazo Derecho XL - Sectional Sofa Right XL
1 x 70059 Sofá Módulo Chaiselonge Izquierda - Sectional Sofa Chaiselonge Left
1 x 70065 Mesa Módulo Centro 120 x 80 - Low Table 47 ¼ x 31 ½"
1 x 70070 Sofá Módulo Esquina - Sectional Sofa Corner

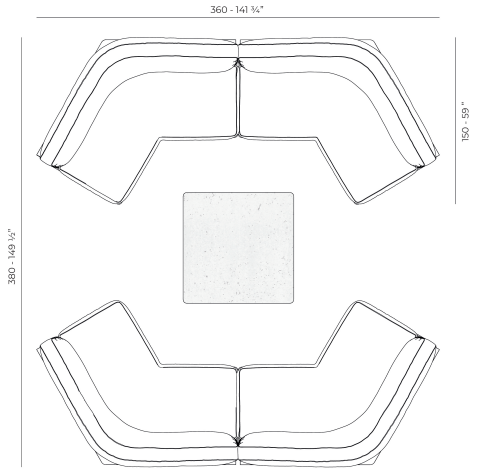

4 x 70071 Sofá Módulo Esquina 60º- Sectional Sofa Corner 60º
1 x 70064 Mesa Centro 100 x 100 - Low Table 39 ¼ x 39 ½"

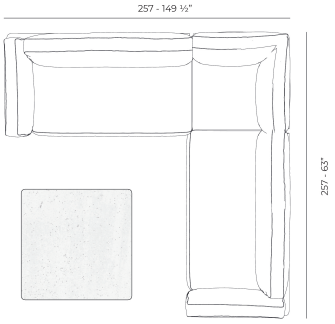

1 x 70053 Sofá Módulo Brazo Derecho XL - Sectional Sofa Right XL
1 x 70054 Sofá Módulo Brazo Izquierdo XL - Sectional Sofa Left XL
1 x 70070 Sofá Módulo Esquina - Sectional Sofa Corner
1 x 70064 Mesa Centro 100 x 100 - Low Table 39 ¼ x 39 ½"

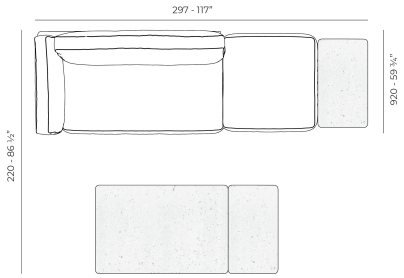

1 x 70053 Sofá Módulo Brazo Derecho XL - Sectional Sofa Right XL
1 x 70072 Sofá Módulo Puff- Sectional Sofa Puff
2 x 70073 Mesa Centro 80 x 45 - Low Table 31 ½ x 17 ¾"
1 x 70065 Mesa Centro 120 x 80 - Low Table 47 ¼ x 31 ½"

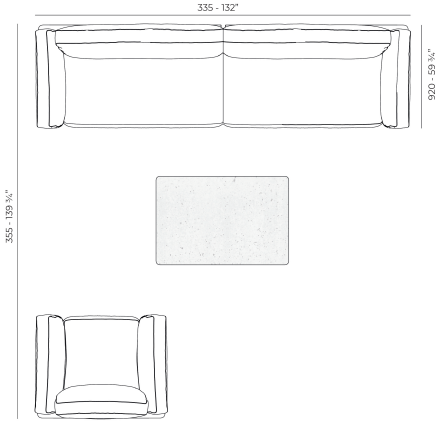

1 x 70053 Sofá Módulo Brazo Derecho XL - Sectional Sofa Right XL
1 x 70054 Sofá Módulo Brazo Izquierdo XL - Sectional Sofa Left XL
1 x 70050 Butaca - Armchair
1 x 70065 Mesa Centro 120 x 80 - Low Table 47 ¼ x 31 ½"

Finishes

finishes

Cement
Ref. 70065

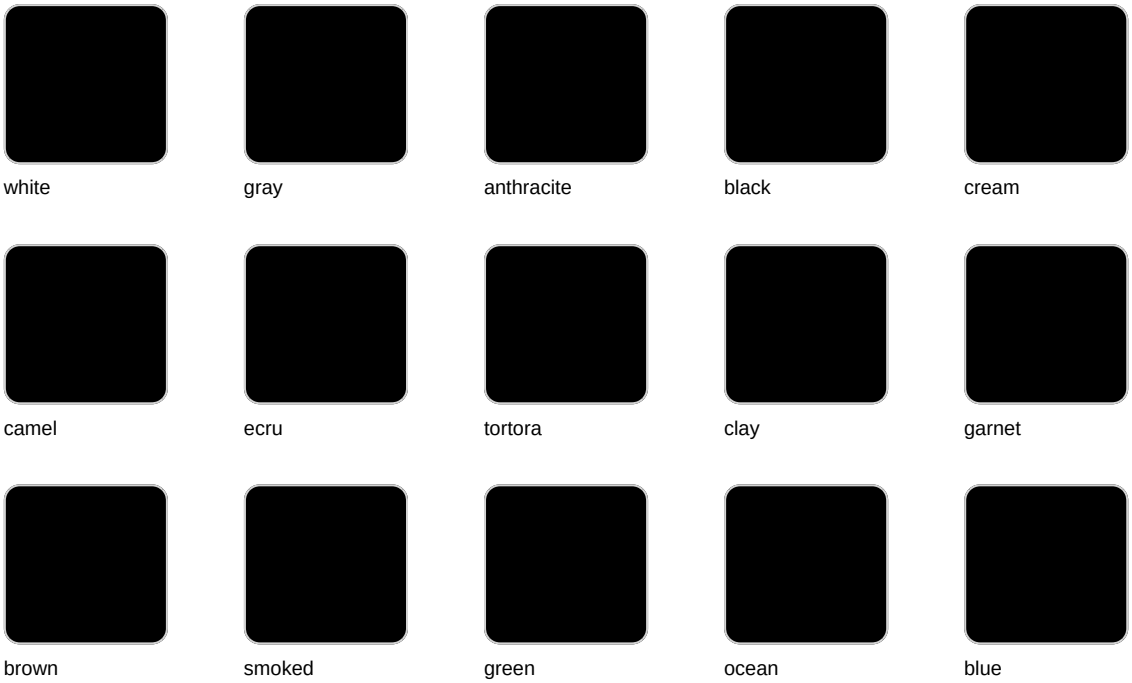

Furniture elements manufactured in high-strength fibrated mortar, by casting and vibrating in elastorner moulds and rigid fiberglass shell

tabletops

Cement
Ref. 70065TBL



tortora



cream

Ambients























